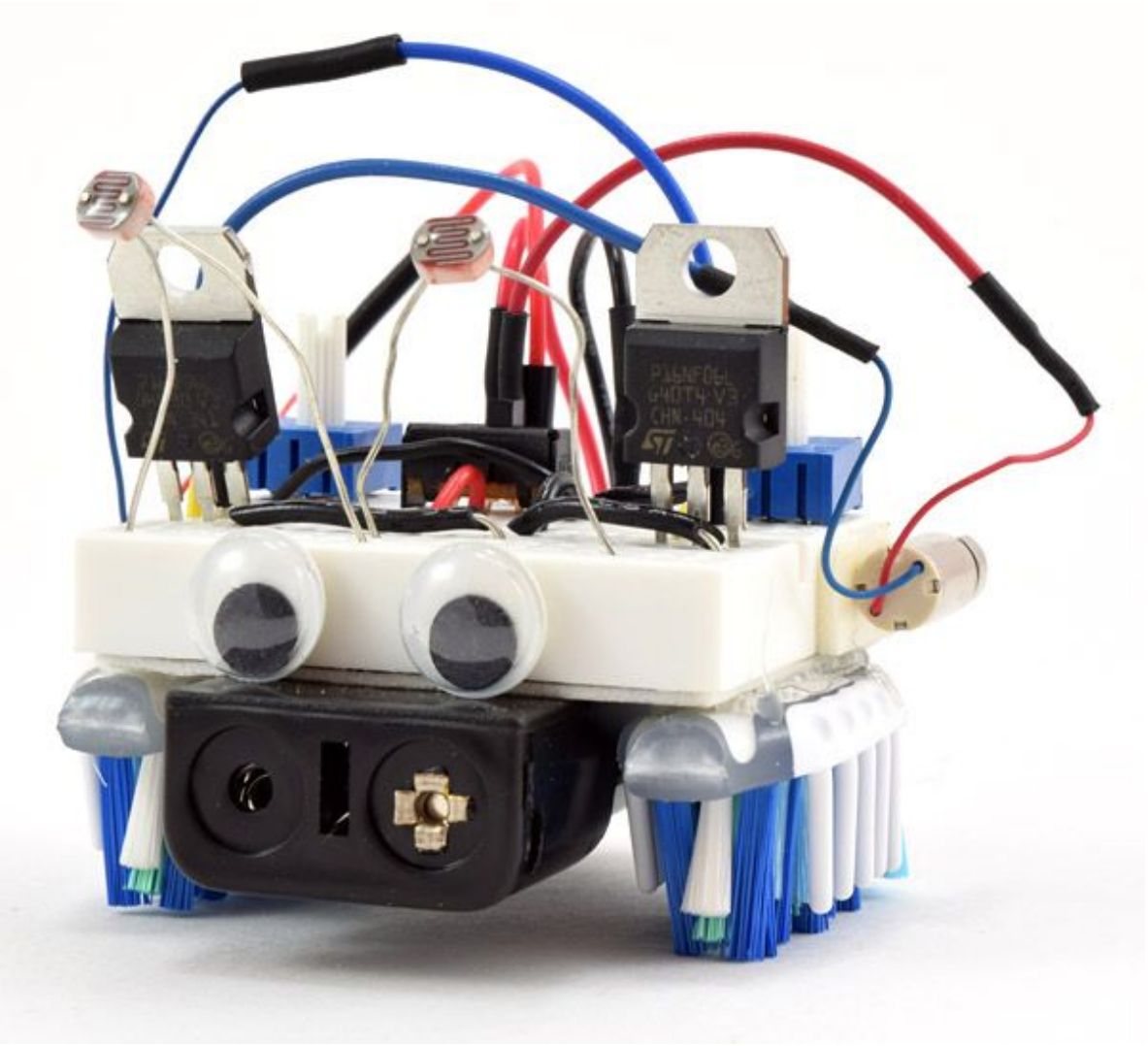

Breadboard Light Following Brushbots

By Joe Brown 7th January 2020

Inspired by homesciencetools.com

Introduction

You may have built a brushbot before - a vibration motor and a battery connected to a toothbrush head creating a bumbling buzzing insect like robot. Today you're creating an 'intelligent' brushbot, with the ability to follow a light source!

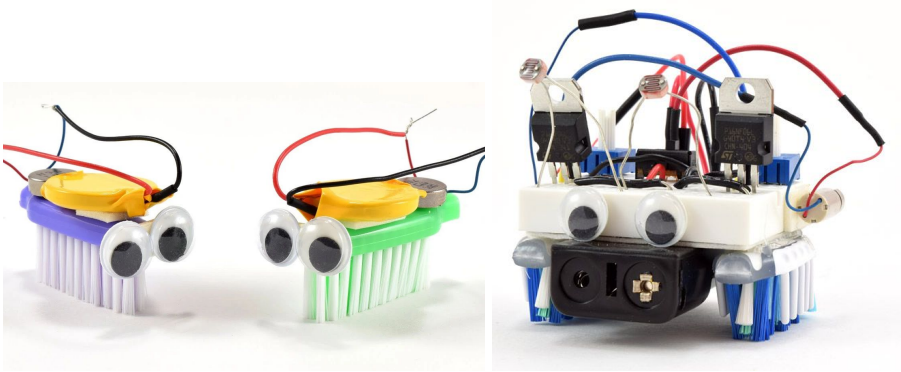

Basic Brushbots (left) Light following brushbot (right)

What you need:

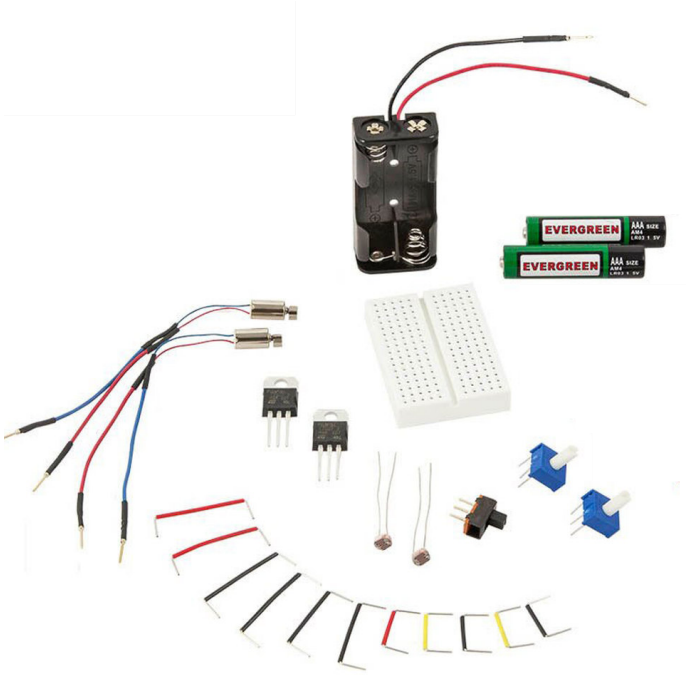

- 1 breadboard
- 2 vibration motors
- 1 AAA battery holder & 2 AAA batteries
- 2 potentiometers
- 2 mosfets
- 2 photoresistors
- 1 switch
- 10 jumper wires

Oh and two toothbrush heads!

Build the body

Peel the adhesive layer off the **breadboard** and attach the **battery holder** to the centre.

Insert the **AAA batteries t**hen stick the **two toothbrush heads** either side, symmetrically.

Attach the **two vibration motors** to the sides of the breadboard using **double-sided foam tape**. Make sure the small weights on the motors can spin freely and not get stuck.

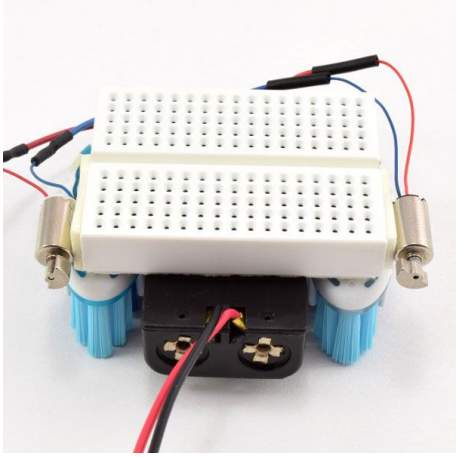

That’s the body done! Now let’s make the circuit.

What is a breadboard?

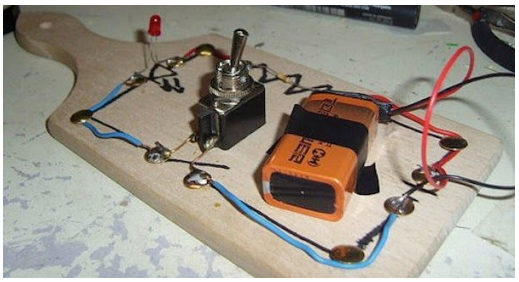

Early electronic circuits were made using nails and wires connected to spare breadboards normally used for slicing bread!
The nickname stuck as new more suitable boards for electronics were made.

How does it work?

Holes down the lines of the breadboard are connected up like the ones marked in green. This is called a terminal strip.

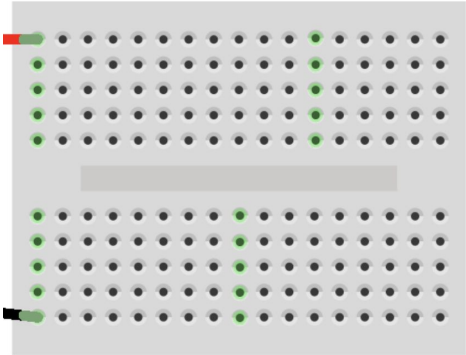

Electronics plugged into these holes are connected together by metal strips inside the breadboard - the terminal strip.

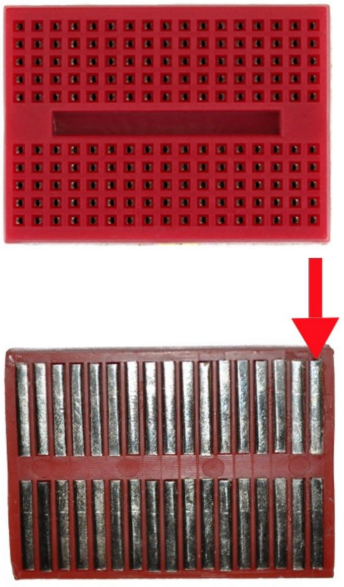

Build the circuit

Rotate the robot body so the vibration motors at the top of the breadboard (like the diagram below)

Add the **switch** in the top middle of the breadboard.

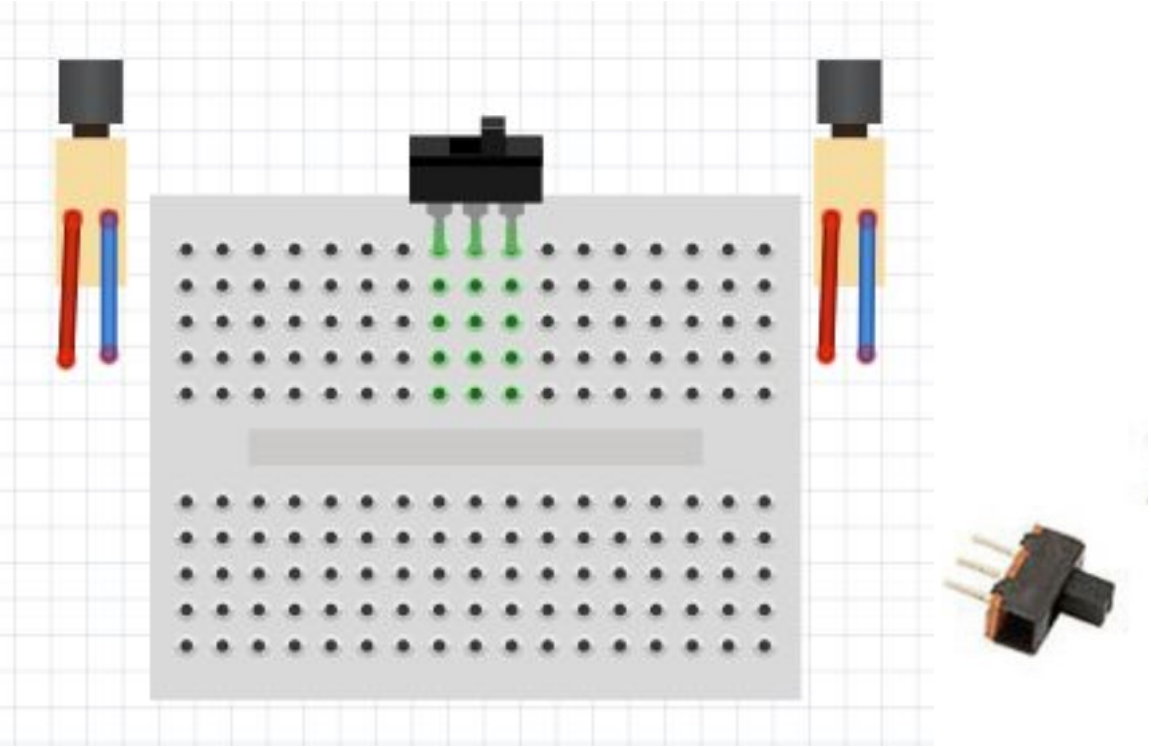

Slide switch

Now add the **two potentiometers** on the top left and right of the breadboard

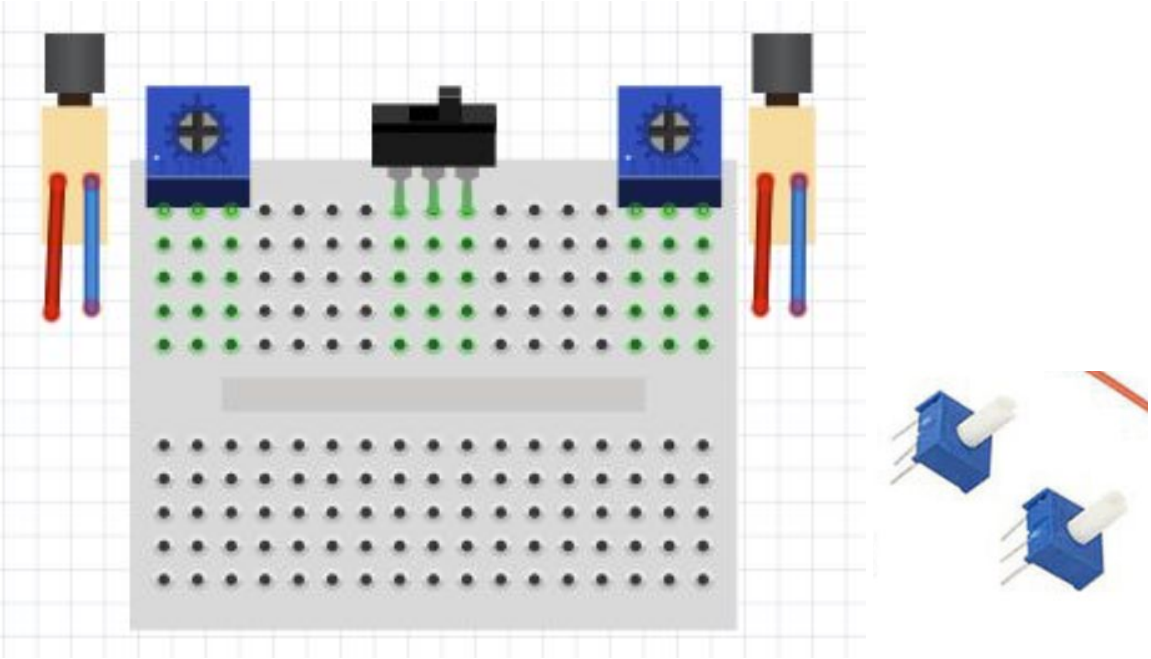

Potentiometers

Connect up **one cable from each motor** (seen here in red) to the middle pin of the switch

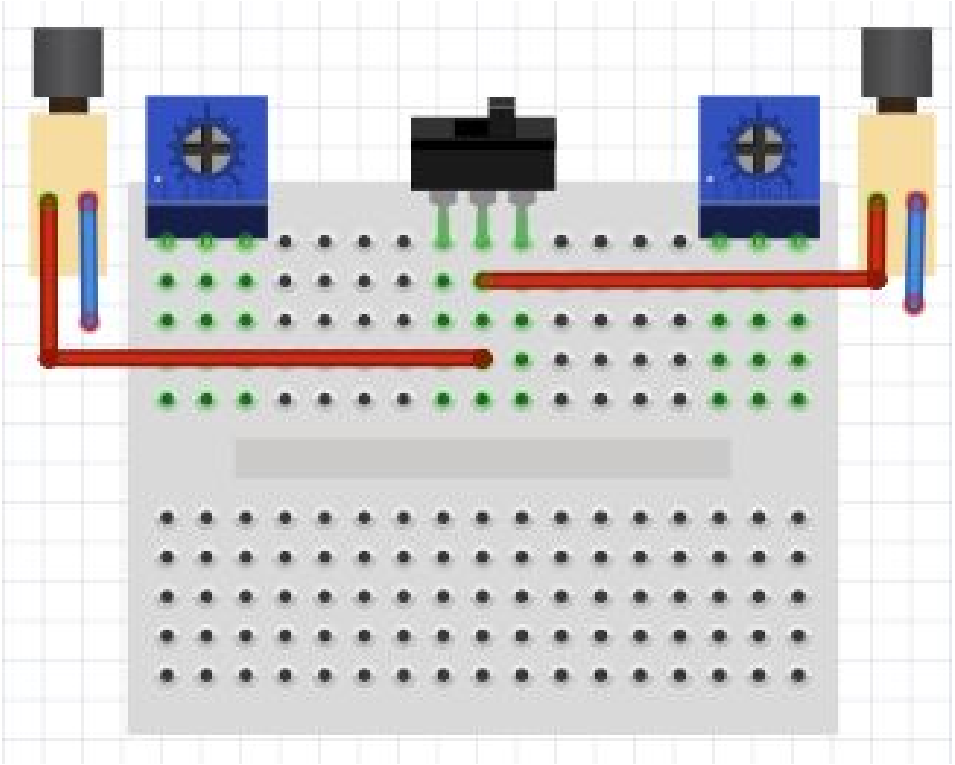

add a wire (seen here in red) across the middle of the breadboard to connect the switch to the other side

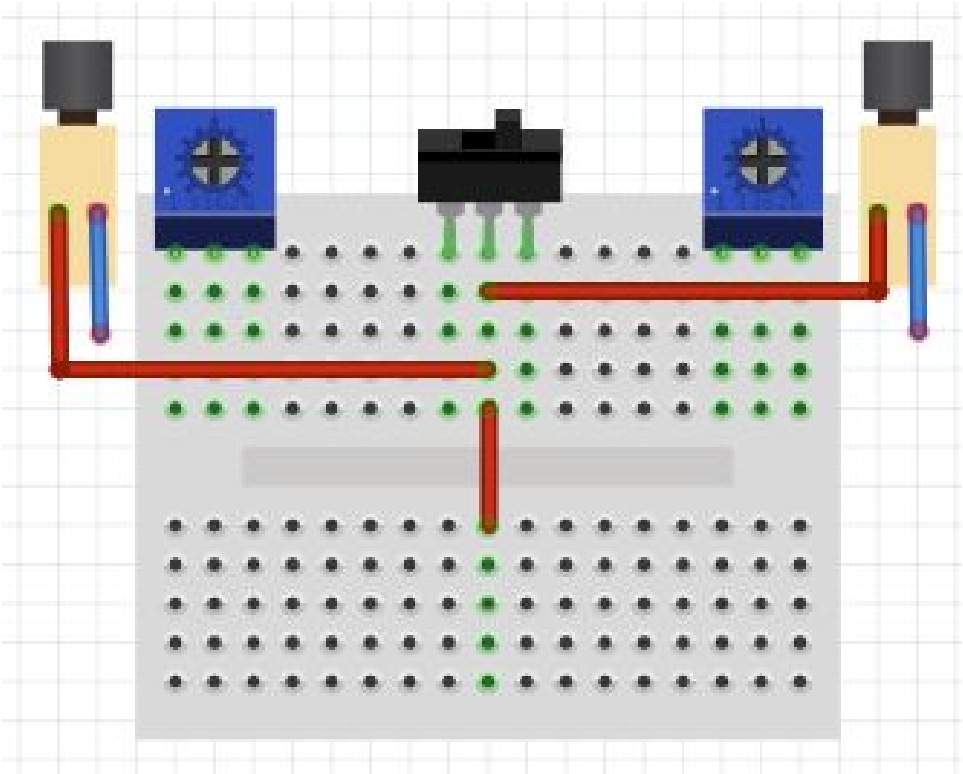

Now add **two wires** (seen here in black) connecting the middle pins of the potentiometers

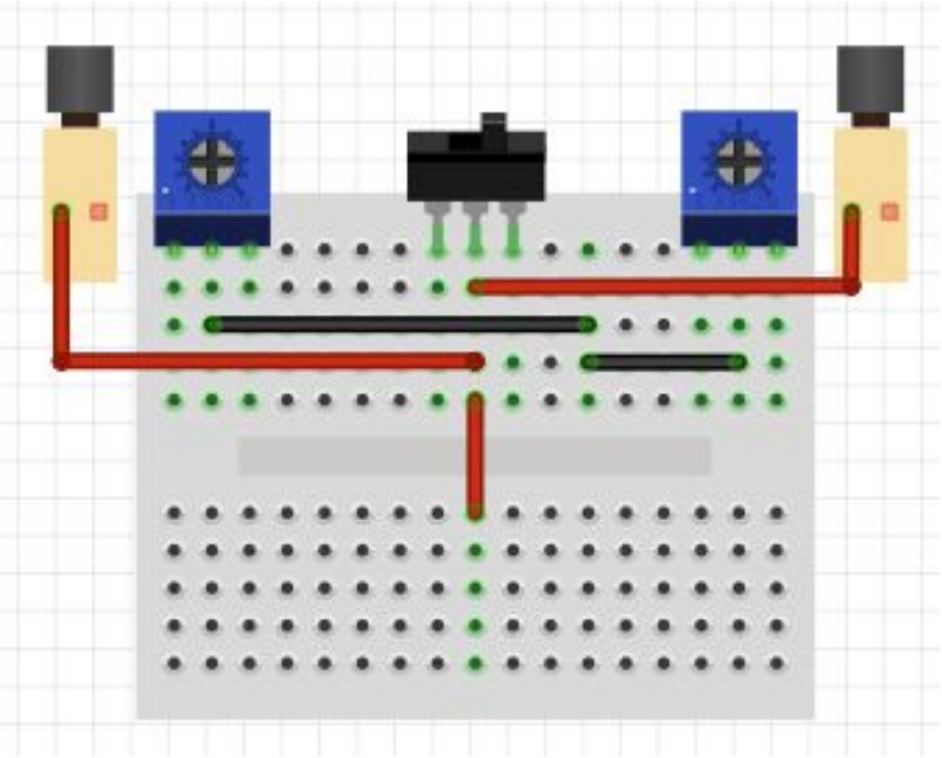

Add a **wire** (seen here in black) bridging the middle of the breadboard, similar to the one earlier.

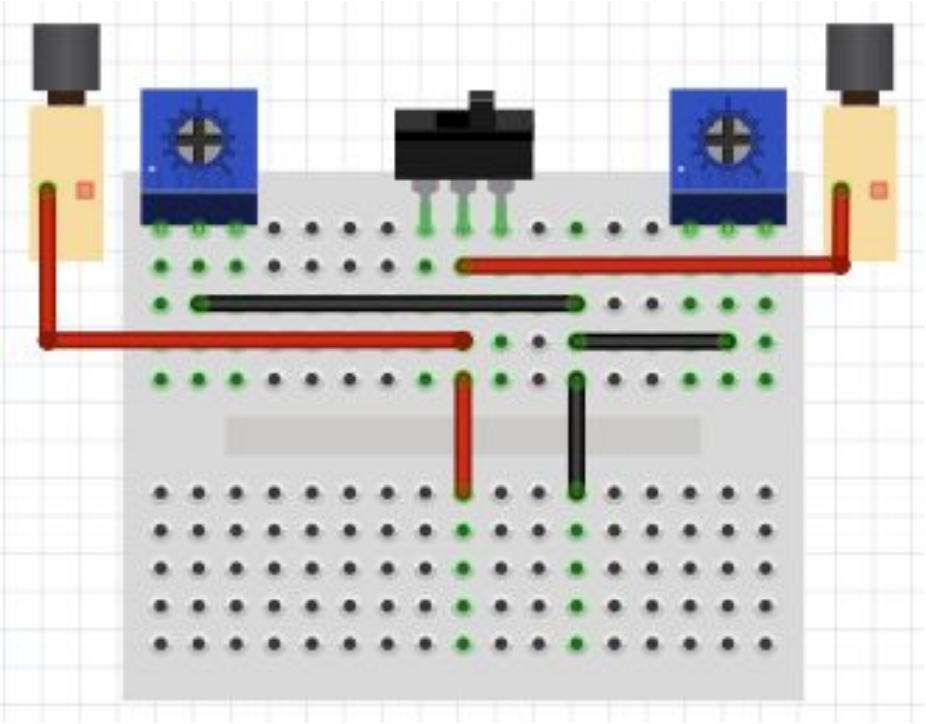

Add the **two MOSFETs** in the positions shown

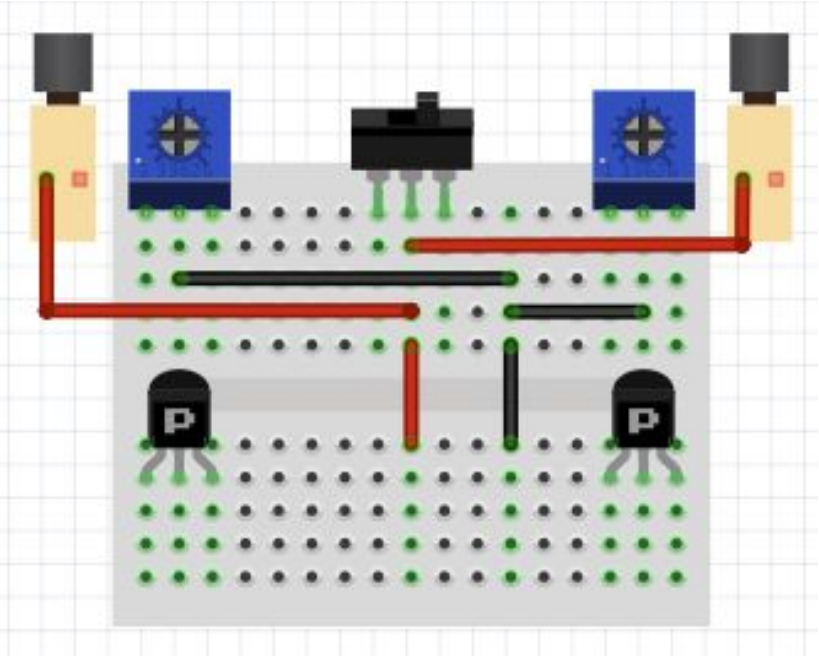

MOSFETs

Add **two wires** (seen here in black) to connect the right legs of the MOSFETs to the black bridge wire

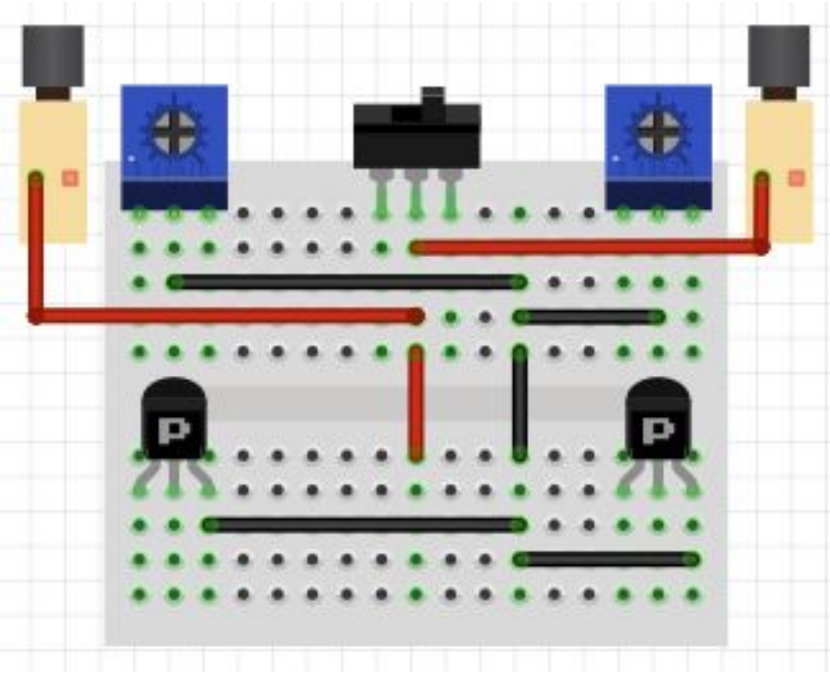

Add **two photoresistors** connecting the left legs of the MOSFETs to the red bridge wire

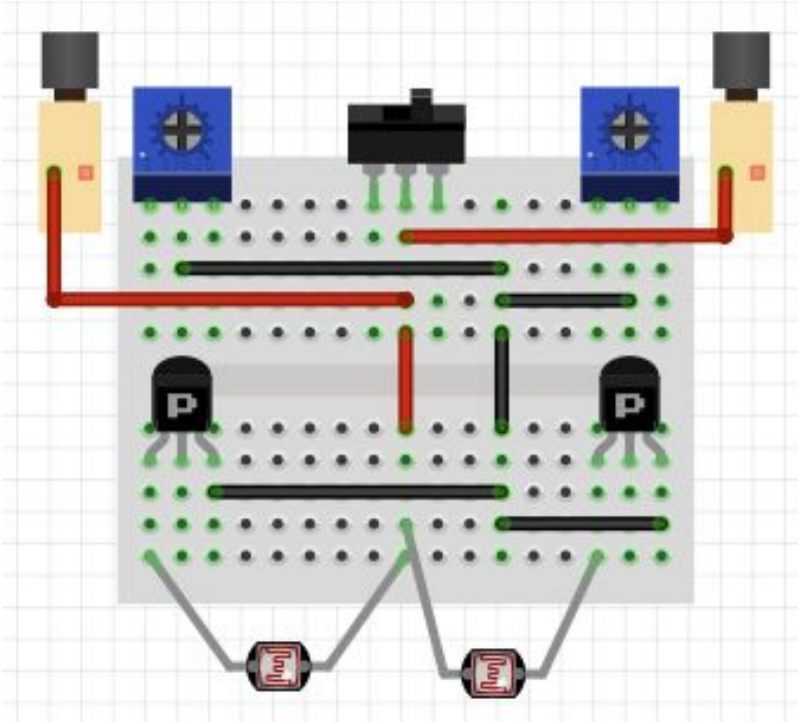

Photoresistor

Connect the other **two motor wires** (seen here in blue) to the opposite middle MOSFET legs. Make sure they're the opposite ones otherwise your brushbot will turn away from the light!

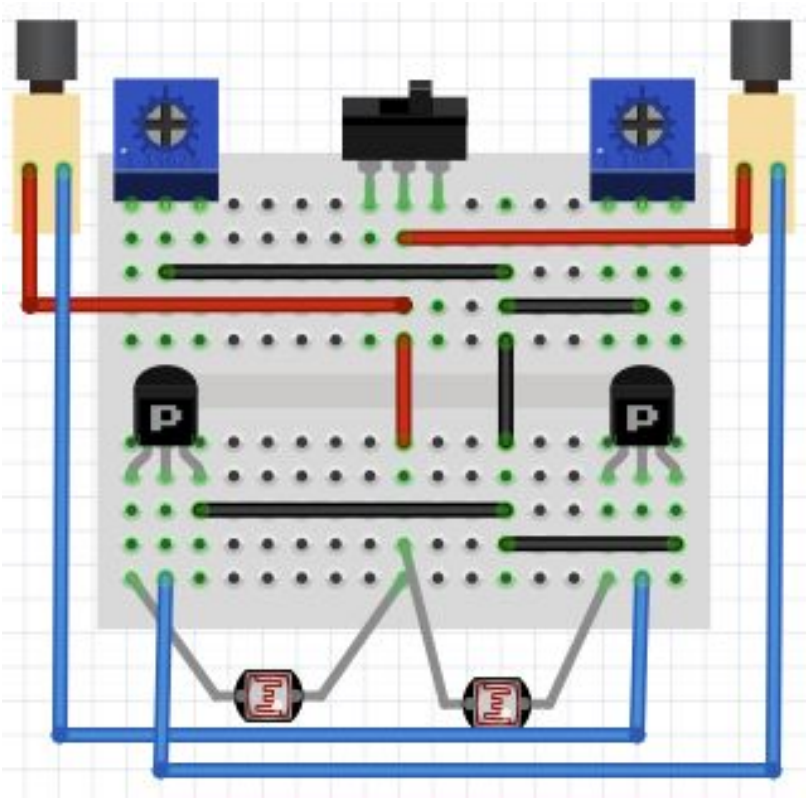

Add **two wires** (seen here in yellow)
from the left leg of the MOSFETs to the left leg of the potentiometers

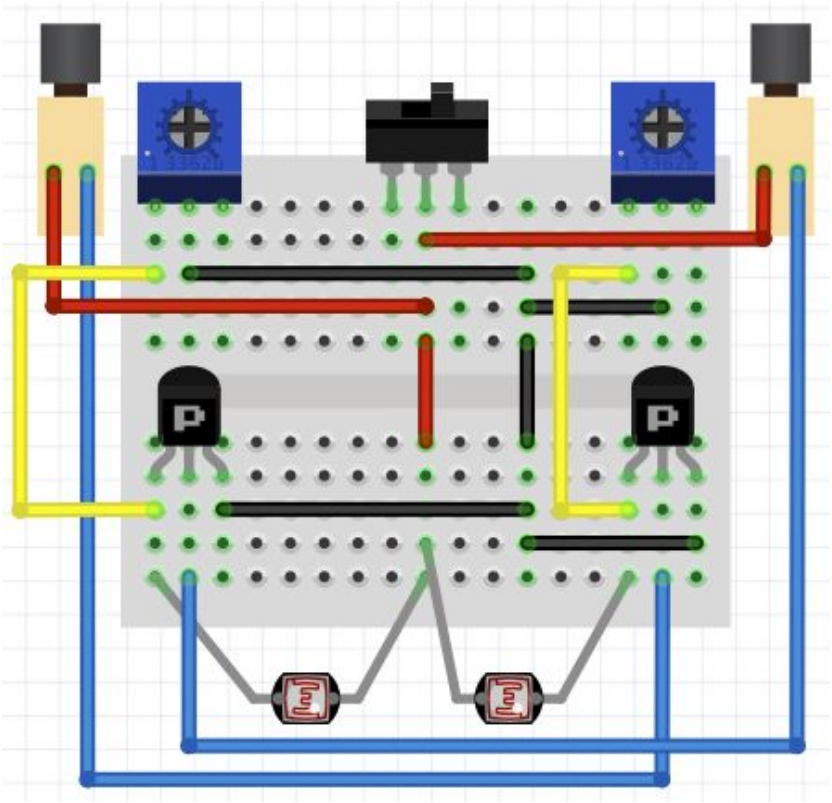

Finally, connect the **battery** in the following positions on the top of the breadboard.
Be sure to wire the red and black wires exactly as shown!

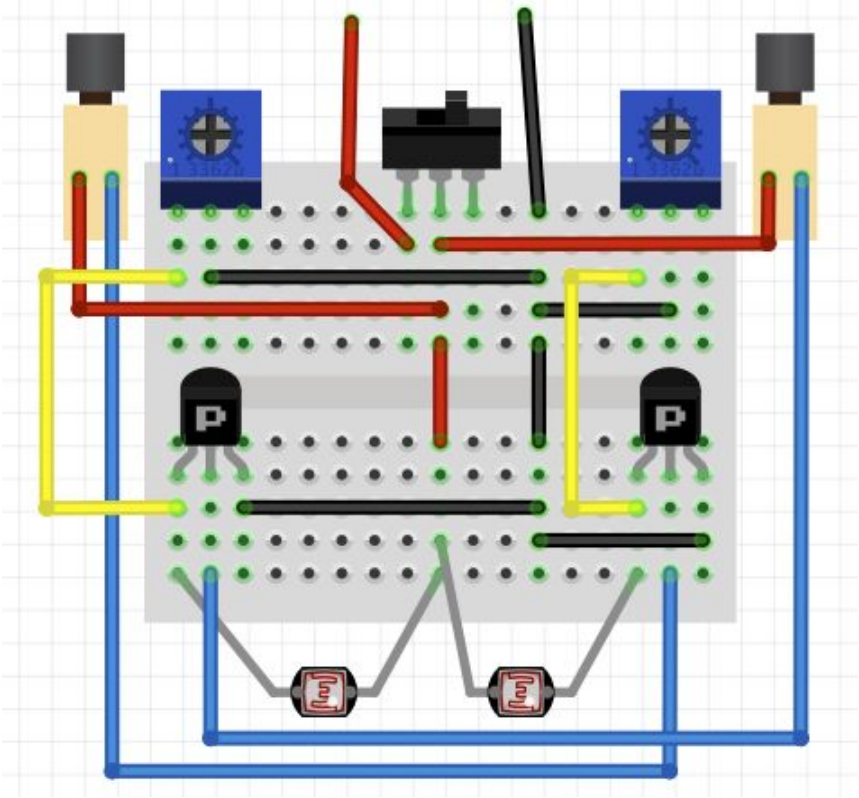

Testing the robot

1. Bend the photoresistors up and outwards like antennas to ‘look’ for light

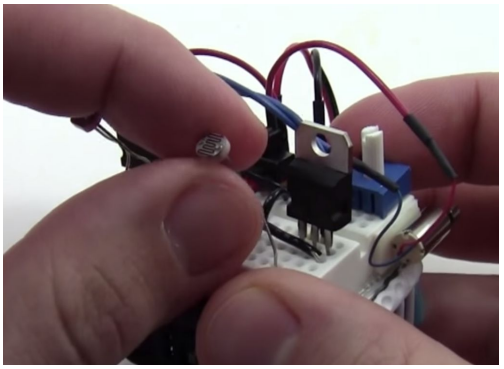

2. Turn the potentiometers all the way anticlockwise (twist to the left)

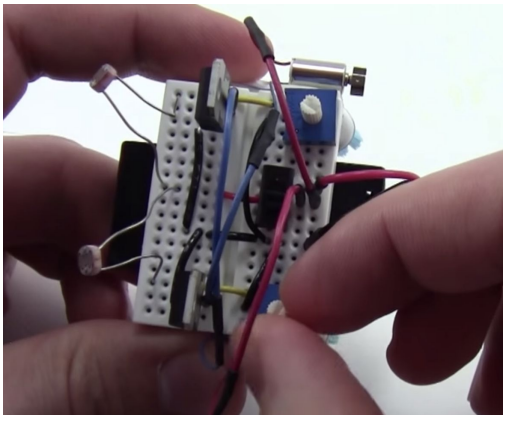

3. Turn on the robot with the switch, and nothing should happen!

4. Now slowly turn one of the potentiometers clockwise (to the right) until you see the opposite motor moving.
5. Turn it down again and try this for the other potentiometer.

If both motors have moved your circuit works!
If not, check over your circuit and ask for help if you can’t work out what’s incorrect.

These are controlling the photoresistor’s sensitivity to the light - as you turn them up enough the ambient light of the room is enough to trigger the circuit and make the motor move.

6. So to make them work well with a torch we need to set the potentiometers **just below** the ambient light threshold to make the motors spin - so:
    - twist them slowly clockwise until the motors move
    - Then twist slowly back anticlockwise until they **just** stop spinning

7. Now test with a torch - does the right motor move when you shine it on the left photoresistor?

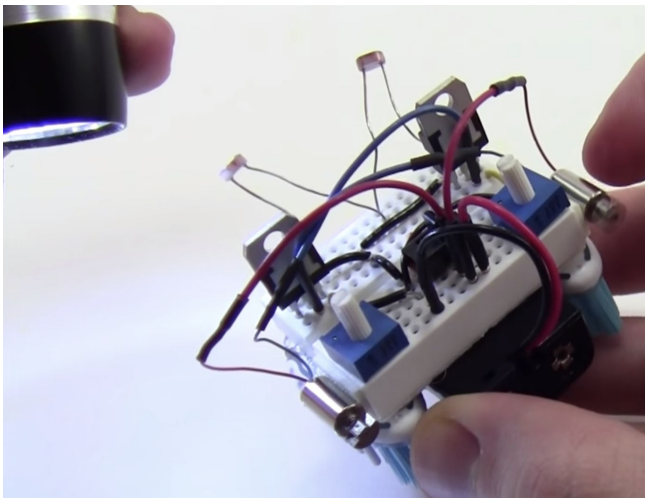

8. Now test with the right photoresistor. Does the left motor move when you shine the torch on it?
9. If you shine the torch on both photoresistors, the robot should move forwards!

Finishing steps

Test the brushbot's steering - positioning of the photoresistor dial and brushheads can greatly affect this.
If your robot doesn't move very much, you can modify the brushes - first try squishing them angled backwards from the photoresistors towards the motors.

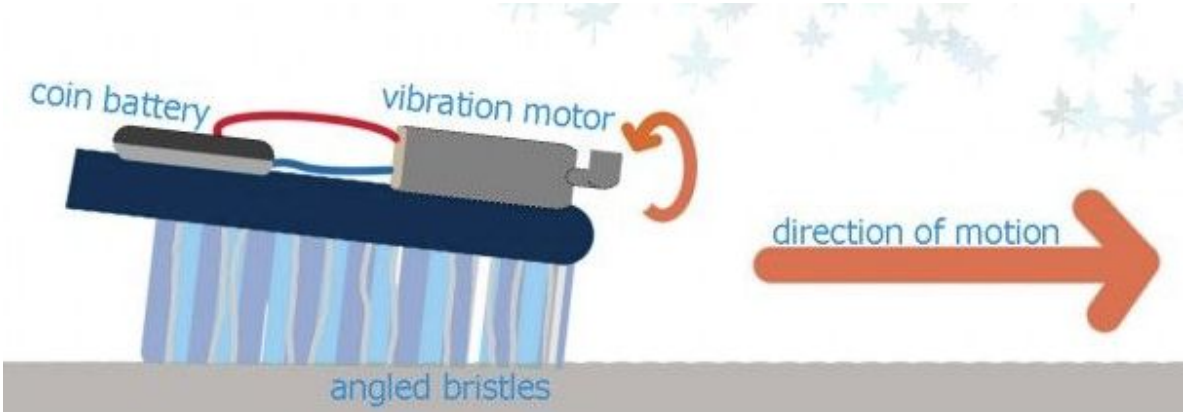

You can also use scissors to trim the brushes at an angle to help forwards momentum.